NOVEEN
ONE STOP BATHROOM SOLUTION

Paris Smart Toilet - V7201

Product name and code	PARIS Smart Wall Hung Toilet Suite V7201
Rated voltage	220-240V
Rated frequency	50/60Hz
Rated power	1080W-1130W
Heating method	Instant heating
Environment temperature	0-40°C
Operating pressure	0.08MPa - 0.8MPa (Static pressure)
Flushing volume	Full flush - 6.0L / Half flush - 4.0L
Trap	P-trap with concealed cistern
Seat temperature range	6 Settings (including neutral position)
Water temperature range	6 Settings (including neutral position)
Warm air temperature range	6 Settings (including neutral position)
Warm air speed	>0.2m³/min
Device safety prevention measures	Temperature sensor, anti-air burning device, temperature controller, temperature fuse, earth protection, leakage protection device, anti-freeze cracking device, anti-low temperature scald, filter device, air-gap anti flow

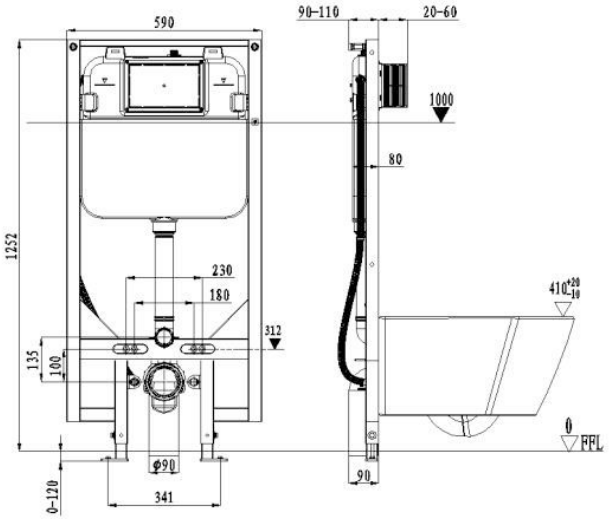

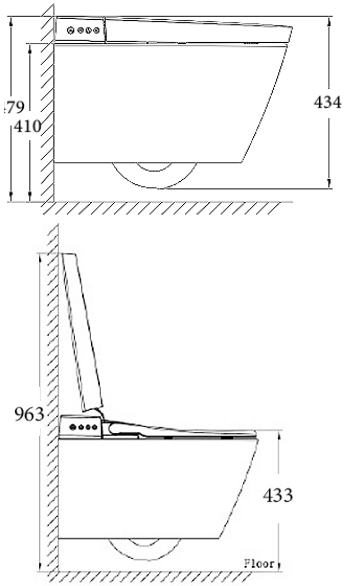

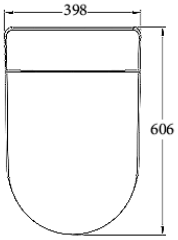

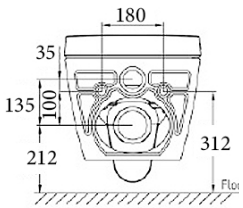

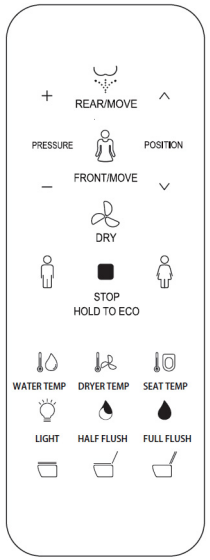

- Rimless Design
- Adjustable Water Temperature
- Night Light
- Automatic Flush Feature
- Mobile Nozzle
- Heated Seat
- Arc-Shaped Nozzle
- Hygienic Deodorizer
- Self Cleaning & Detachable Nozzle
- Front & Rear Wash
- Anti-Freezing & Anti-Cracking
- Warm Air Dryer

NOVEEN IS BROUGHT TO YOU BY BESTBM

Updated: September 2024